BAR

City of Clemson

PLANNING & CODES ADMINISTRATION

1250 Tiger Blvd, Suite 4 • Clemson, SC 29631-2662 • (864) 653-2050 • Fax (864) 653-2057 • www.cityofclemson.org

BOARD OF ARCHITECTURAL REVIEW

AGENDA APPLICATION

Please complete in ink and return to the Planning and Codes Administration Department with required attachments and information. Agenda applications require eight (8) copies of each supporting document with all renderings and drawings to scale. A color rendering may be presented directly to the board, however the colors must be indicated on the submitted documents. All photographs must be on "photo quality" paper. The applicant understands that the board should be able to interpret without difficulty the applicant's documents, renderings, or other supporting evidence to review and act upon the request.

File no.: AR -	PIN: - - -	Date submitted: / /	Board meeting date: / /

OWNER(S) INFORMATION

Last name:	First:	Middle:	Interest
Wilson	Stephen Allen/Sharon Peake		☐ Sole owner ☑ Co-owner

Mailing address:	City:	State:	ZIP Code:
109 Pine Forest Dr.	Greenville	SC	29601

Daytime phone no.:	Fax no.:	E-mail:
(864) 982.1184	(864) 595.8920	steveawilson@att.com

APPLICANT INFORMATION

To be completed only if Owner is not Applicant:

Applicant's last name:	First:	Middle:
Starkey	Jonathan	Earl

Mailing address:	City:	State:	ZIP Code:
121 Pineneedle Rd	Statesboro	GA	30458

Daytime phone no.:	Fax no.:	E-mail:
(912) 541.1529	(912) 765.5505	starkey3@me.com

PROPERTY INFORMATION

Property address:	Property dimensions:	Property area:	Zoning district:
101 Sloan St., Clemson SC 29631	* see attachment		AR#1-C

DESCRIPTION OF REQUEST

I request that the board review the following:

Review proposed changes to exterior of building.

Please send a copy of letter to: RSCT Arch + Design
1376 Tiger Blvd, #114
Clemson SC 29631

SIGNATURE

Jon Starkey		12.16.2013
Applicant name	*Applicant signature*	*Date*

Rev. 12-09-05; 06-18-07

1 EXTERIOR ELEVATION - COLLEGE AVE./SLOAN ST.
SCALE: 1/8" = 1'-0"

4 EXAMPLE OF BIFOLD WINDOWS
N.T.S.

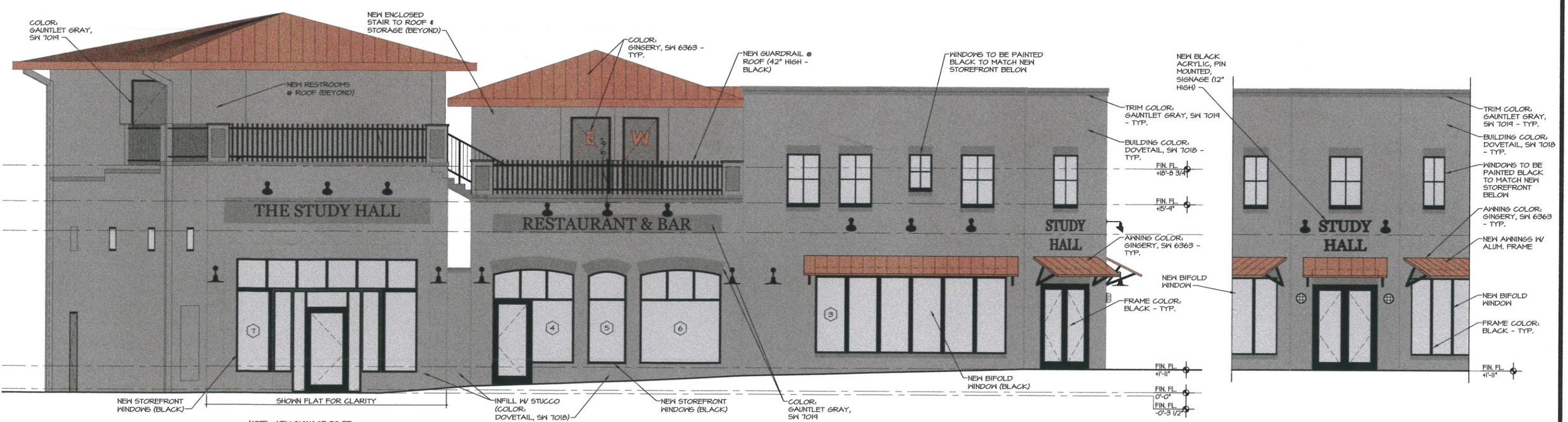

2 EXTERIOR ELEVATION - CLEMSON AVE.
SCALE: 1/8" = 1'-0"

3 EXTERIOR ELEVATION - CORNER OF CLEMSON AVE. & COLLEGE AVE.
SCALE: 1/8" = 1'-0"

R C
ARCHITE
+ DES
CHRISTINE TEDESC
1376 TIGER BL
CLEMSON, S
864.654

EXTERIOR ELEVATIONS

TENANT UPFIT FOR
THE STUDY HALL

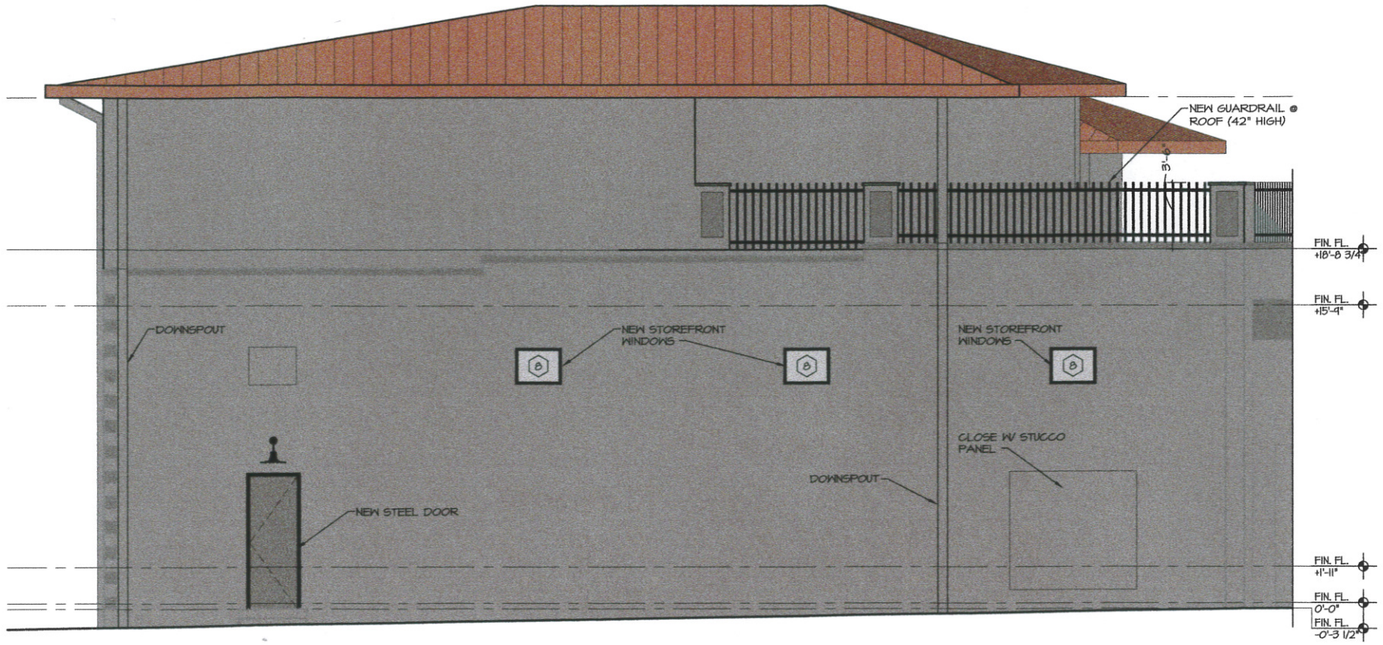

1 EXTERIOR ELEVATION - CLEMSON AVE.
SCALE: 1/8" = 1'-0"

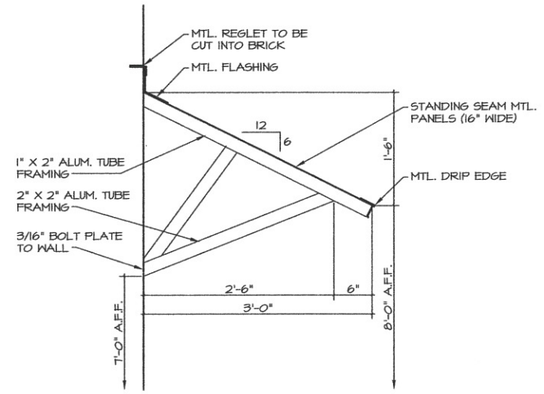

3 CANOPY DETAIL
SCALE: 1/2" = 1'-0"

ANCHORAGE BULKHEAD WALL MOUNT LIGHT FIXTURE
BY BARN LIGHT ELECTRIC COMPANY

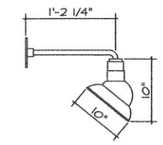

STATIC TOP SIGN LIGHT
BY BARN LIGHT ELECTRIC COMPANY

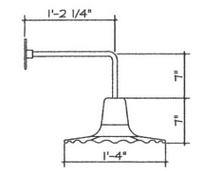

STARFIRE RADIAL WAVE REFLECTOR
BY BARN LIGHT ELECTRIC COMPANY

4 LIGHT FIXTURES
SCALE: 1/2" = 1'-0"

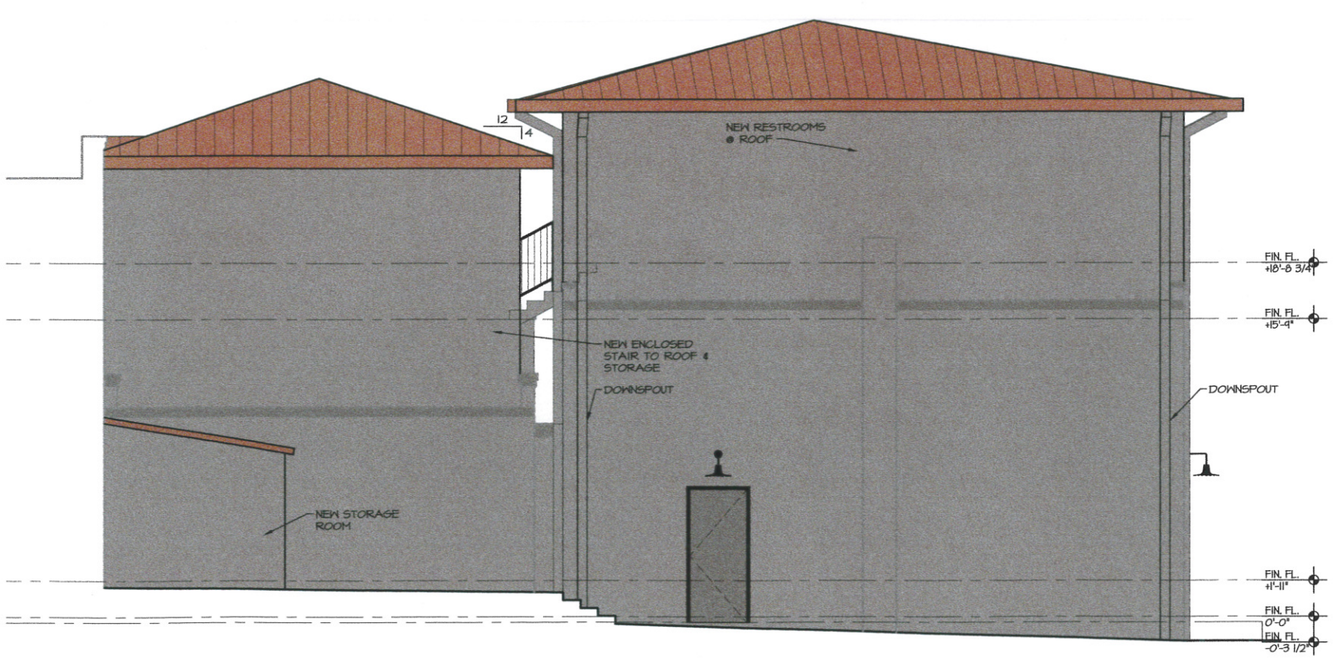

2 EXTERIOR ELEVATION - REAR OF BUILDING
SCALE: 1/8" = 1'-0"

R
C
ARCHIT
+ D
CHRISTINE TEDE
1376 TIGER
CLEMSON,
864.6

TENANT UPFIT FOR