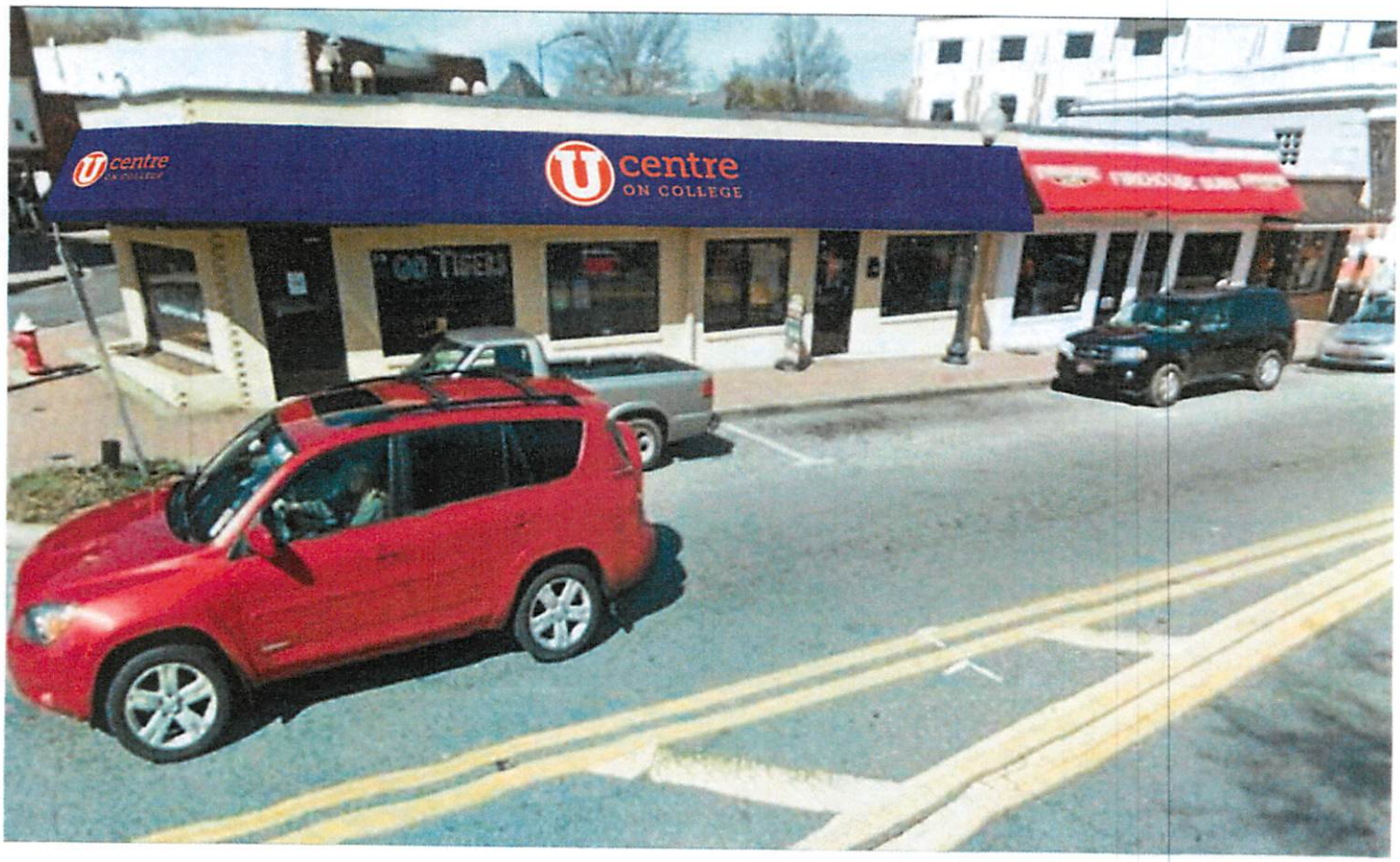
centre
ON COLLEGE
GO TIGERS

SIGN TYPE: IN.1 | WINDOW GRAPHICS

QTY. 1 SET.

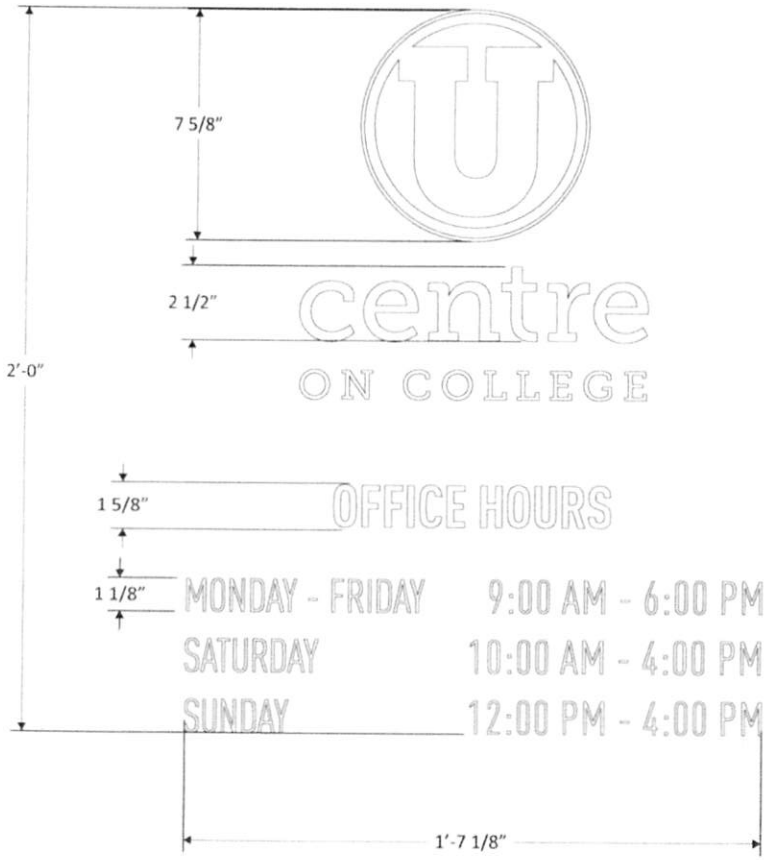

FRONT VIEW
SCALE: 3"=1'0"

FRONT VIEW
SCALE: 3/4"=1'0"

PROJECT FILENAME: UCENTRE ON COLLEGE 2161773

COPYRIGHT © HARDMAN SIGNS ALL RIGHTS RESERVED

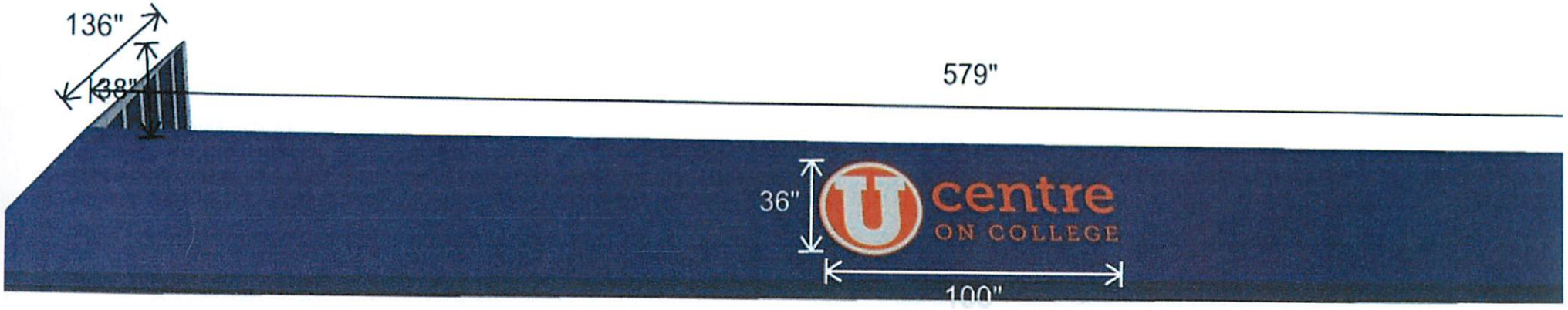
136"
138"
579"
36"
centre
ON COLLEGE
100"

Job Name: Kaci Johnson 1
tag: GAC
traditional recover with 2 logos
Sunbrella: #4665 Concord,
logos to match Sunbrella
4609 Orange

specifications on awning detail
sheet 2

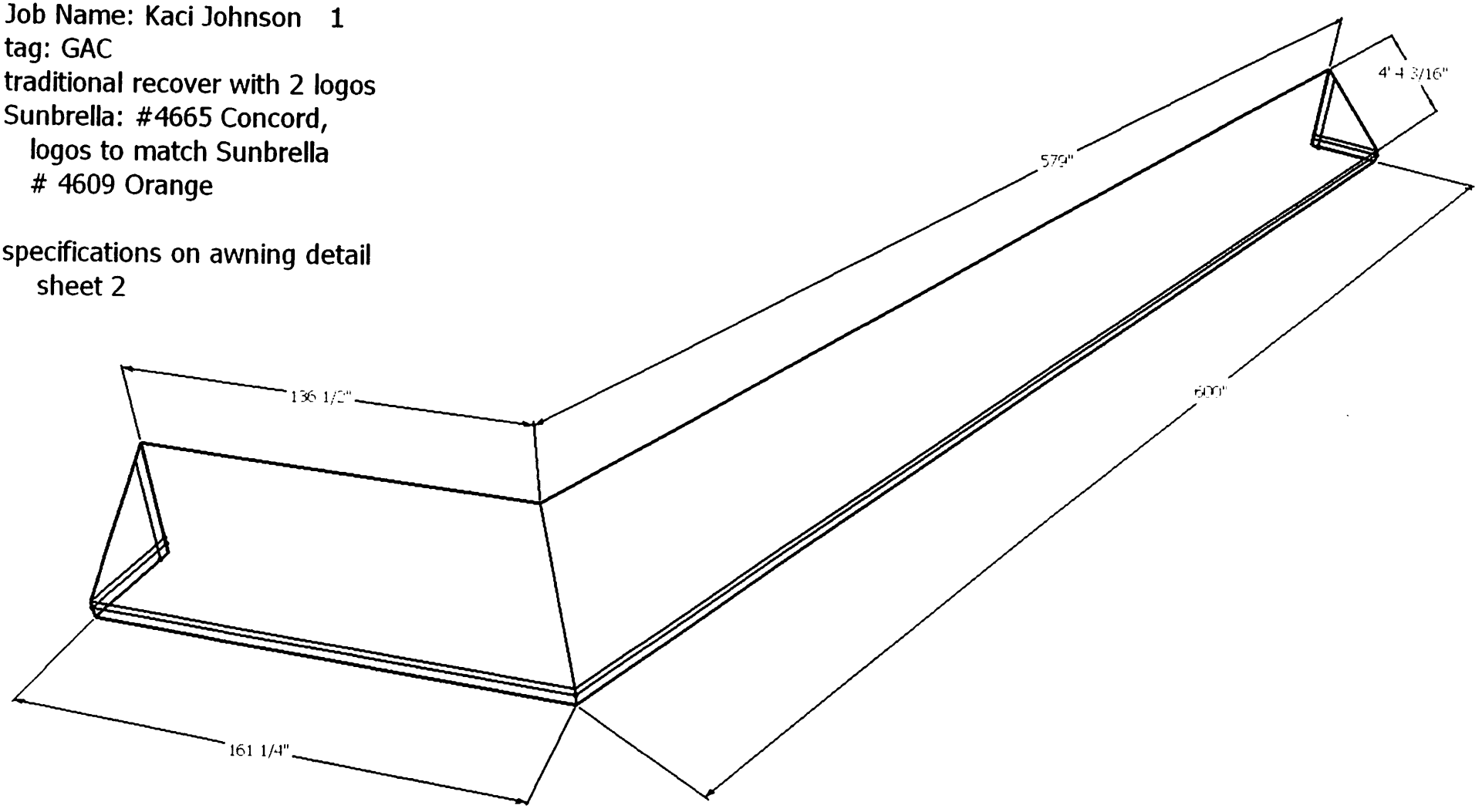

Job Name: Kaci Johnson 2
tag: GAC
traditional recover with 2 logos
Sunbrella: Concord
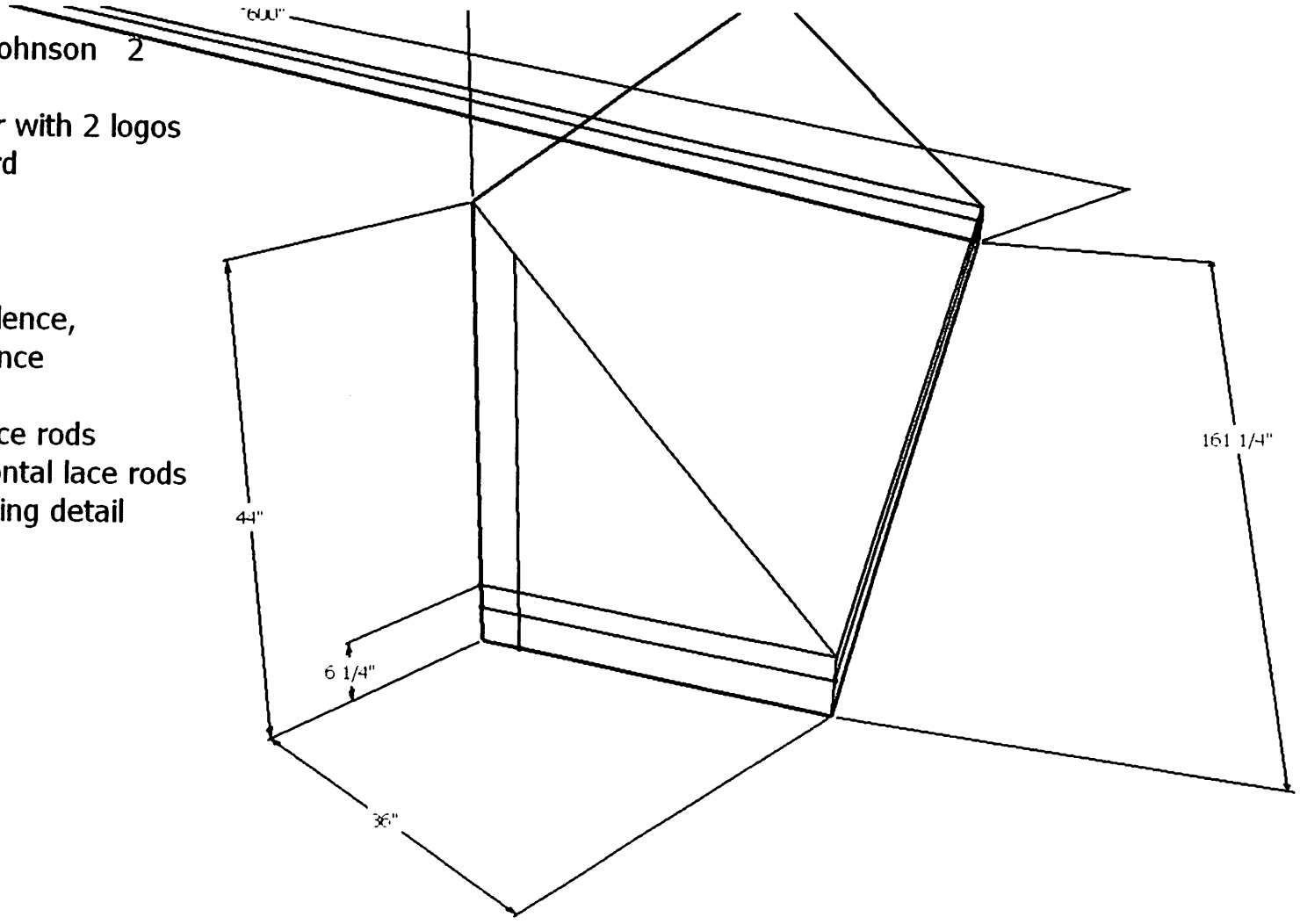
specifications:
1. 44" drop
2. 6 1/4" rigid valence,
   no soft valence
3. 36" projection
4. 4" to vertical lace rods
5. 3 3/4" to horizontal lace rods
6. widths on awning detail
   sheet 1